# RECI-CEST-18
## STACKABLE BIN

## DESCRIPTION

The **RECI-CEST-18 STACKABLE BIN** is a small recycling container made of HDPE that gathers the highest resistance and avoids deformations.

- UV protection.
- Highly resistant to weather conditions.
- The empty bins are easily stackable and reduce the storage and transportation space.
- The handle makes it easy to manipulate.
- The handle design allows to pile up the bins since the bottom fits perfectly with the handle of the inferior bin.
- The sloped opening grants easy access.
- The round edges don't harm the user.
- Light and easy to clean.
- Label space.

## FUNCTIONALITY

- The **RECI-CEST-18 STACKABLE BIN** is perfect for the recollection of solid waste.
- It can be used for:
- Apartments, classrooms, offices, kitchens, dorms, drugstores, etc.
- It can also be used in industrial areas, stores, and households for any type of waste.
- They are easily stackable and create a multipurpose recycling station.
- Since it doesn't have edges or defects, it facilitates the cleaning and discharge of waste.

## CUSTOMIZATION

We can label it with the legend of the type of material or your logo according to your needs.

## FEATURES

**CAPACITY:** 22 L (6 US gal)
**WEIGHT:** 2.33 lb.
**COLOR:** Light gray.

**MEASURES:**
**Length:** 11.7 in.
**Width:** 11.7 in.
**Height:** 13.06 in.
**Height with handle:** 17.94 in.

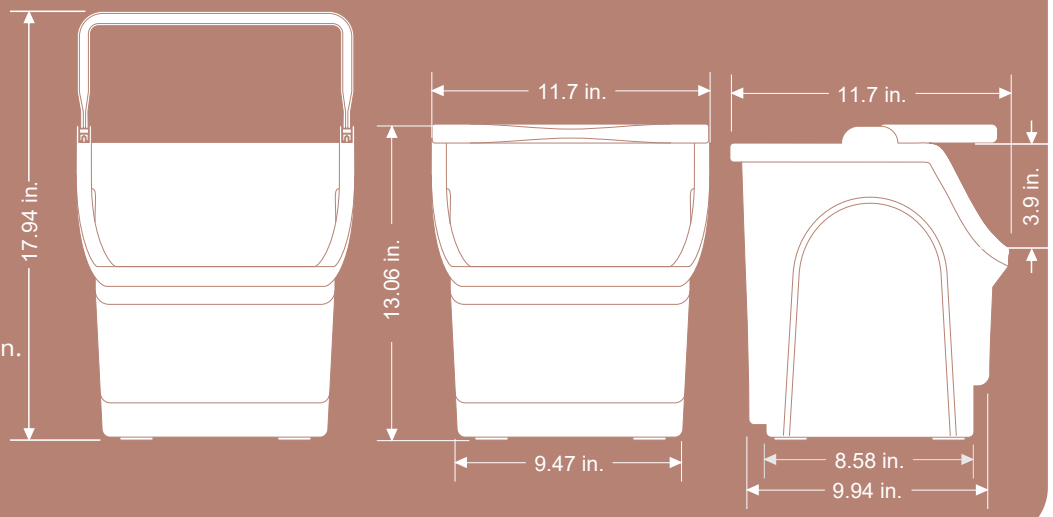


MADE IN MEXICO

## IDEAL FOR INDUSTRIAL AREAS

Lago Ayarza # 88-A, Bodega H-Bis, Col. San Diego Ocoyoacac, Del. Miguel Hidalgo C.P. 11290, Mexico City.
Phones: (+52) 55 5527 2498 and 55 5386 4683
info@a1contenedores.com.mx www.a1contenedores.com.mx